Model(型號): ROTARY POTENTIOMETER---------R12A11H01

► Download PDF file

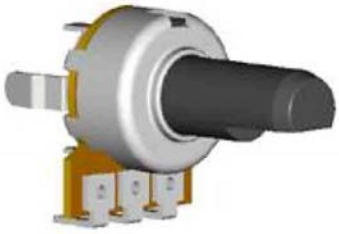

Features:(特點):

Ideal for all type of audio products.

Applications(作用):

Ideal for radio, cassette recorder with radio, amplifier,receiver,etc.

Dimensions(規格圖):

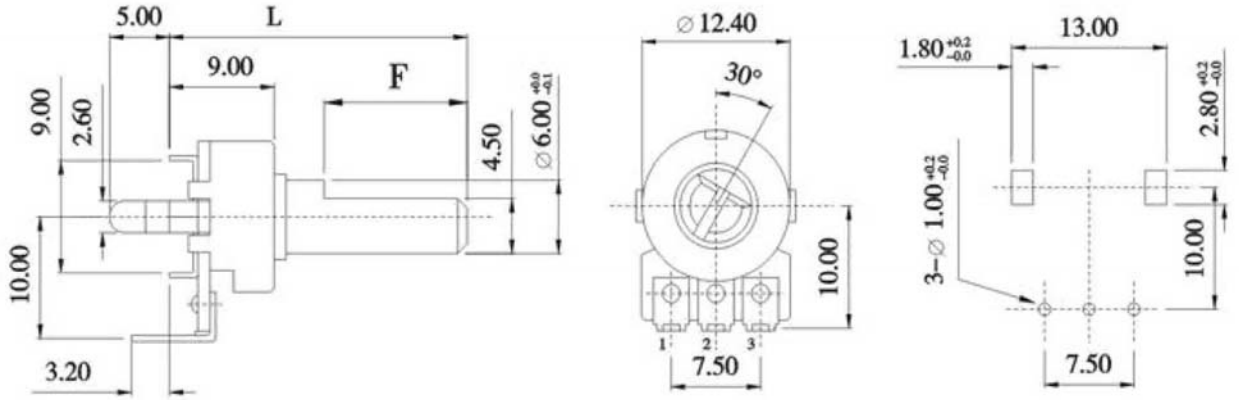

TYPE OF KNOB

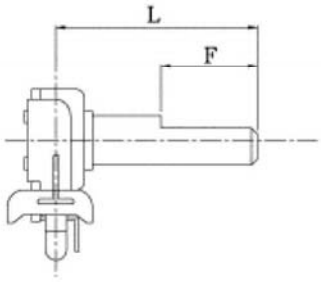

F Type

L	10	15	15	20	25	30
F	5	7	8	12	12	12

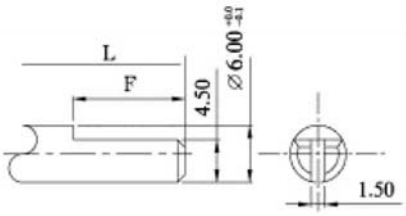

K Type

L	10	15	15	20	25	30
F	5	7	8	12	12	12

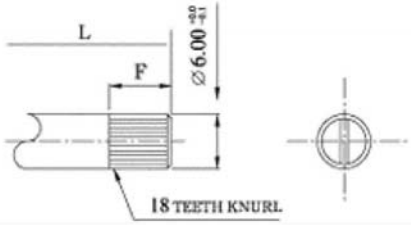

T Type

L	10	15	15	20	25	30
F	5	7	8	12	12	12

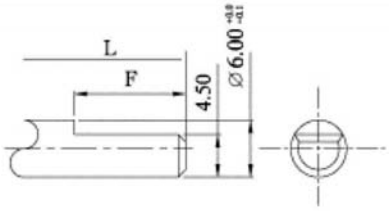

Specifications(規格)

Electrical Characteristics [電氣性能]	
Total resistance [全阻抗值]	500Ω - 1MΩ
Total resistance tolerance [全阻抗值容許差]	±20%
Ratings power(w) [額定功率]	0.05W
Resistance taper [阻抗變化特性]	A,B, *C,D,W

Residual resistance [殘留阻值]	30KΩMax.
Sliding noise [滑動雜音]	100mV Max.
Withstanding voltage [耐電壓]	1 minute at AC 300V
Gang error [連動誤差]	-40dB ~ 0dB ±3dB Max.
Insulation resistance [絕緣阻抗]	100MΩ Min. at DC 100V.
Max. operating voltage [最高使用電壓]	50V AC 20V DC
Mechanical Characteristics [机械性能]	
Operation torque [回轉力矩]	20~250gf . cm
Rotation stopper strength [止動強度]	2.0Kgf . cm Min.
Total rotational angle [回轉角度]	300±5°
Center decent force [掣子脫出力矩]	50~300gf.cm
Endurance Characteristics [耐久性能]	
Rotational life [回轉壽命]	More than10,000 cycles

Http://www.productwell.com E-Mail: pwltw@productwell.com TEL: 0769-81353212 FAX: 0769-81353211